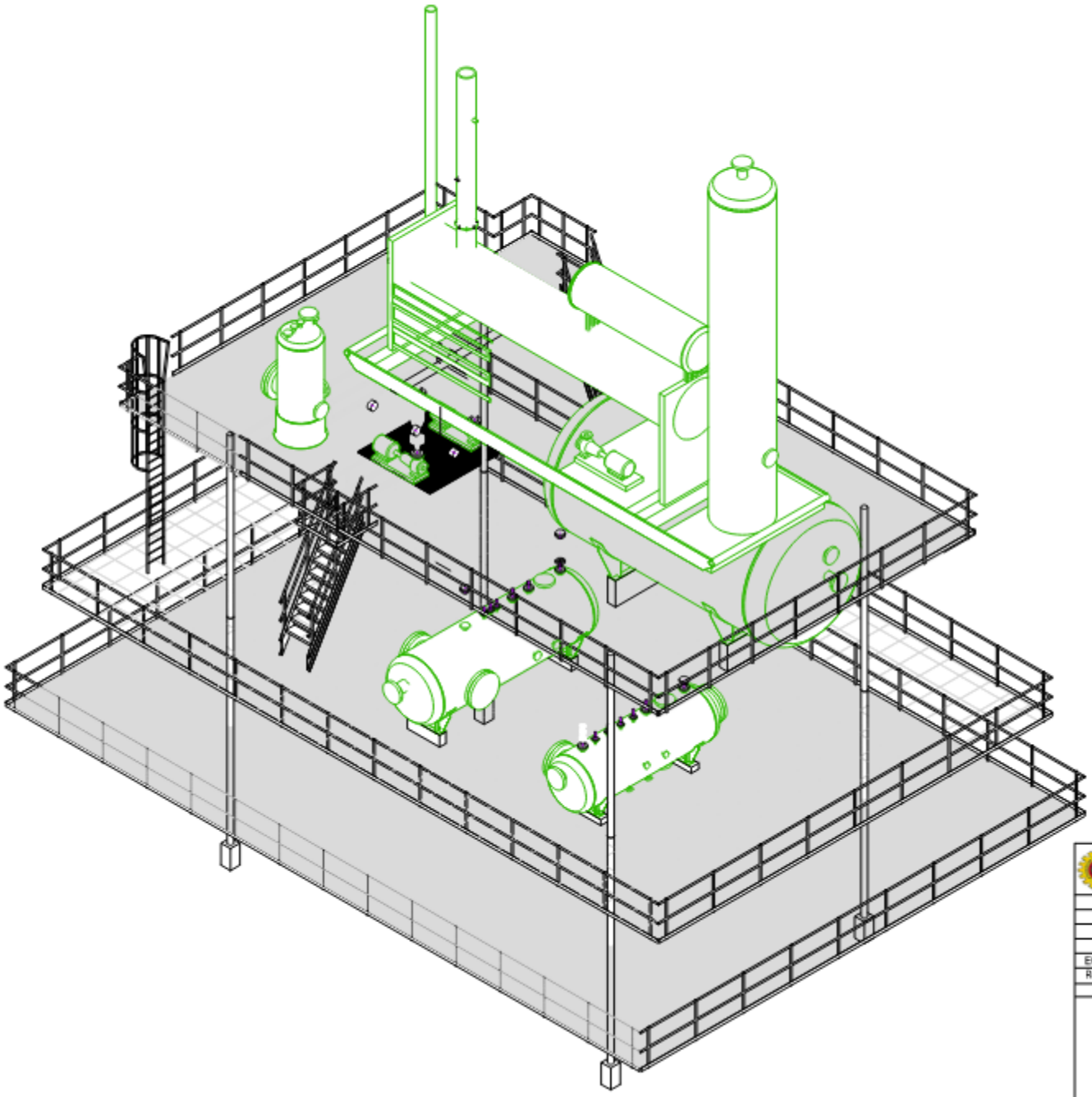

E01	IFR
Rev	Status

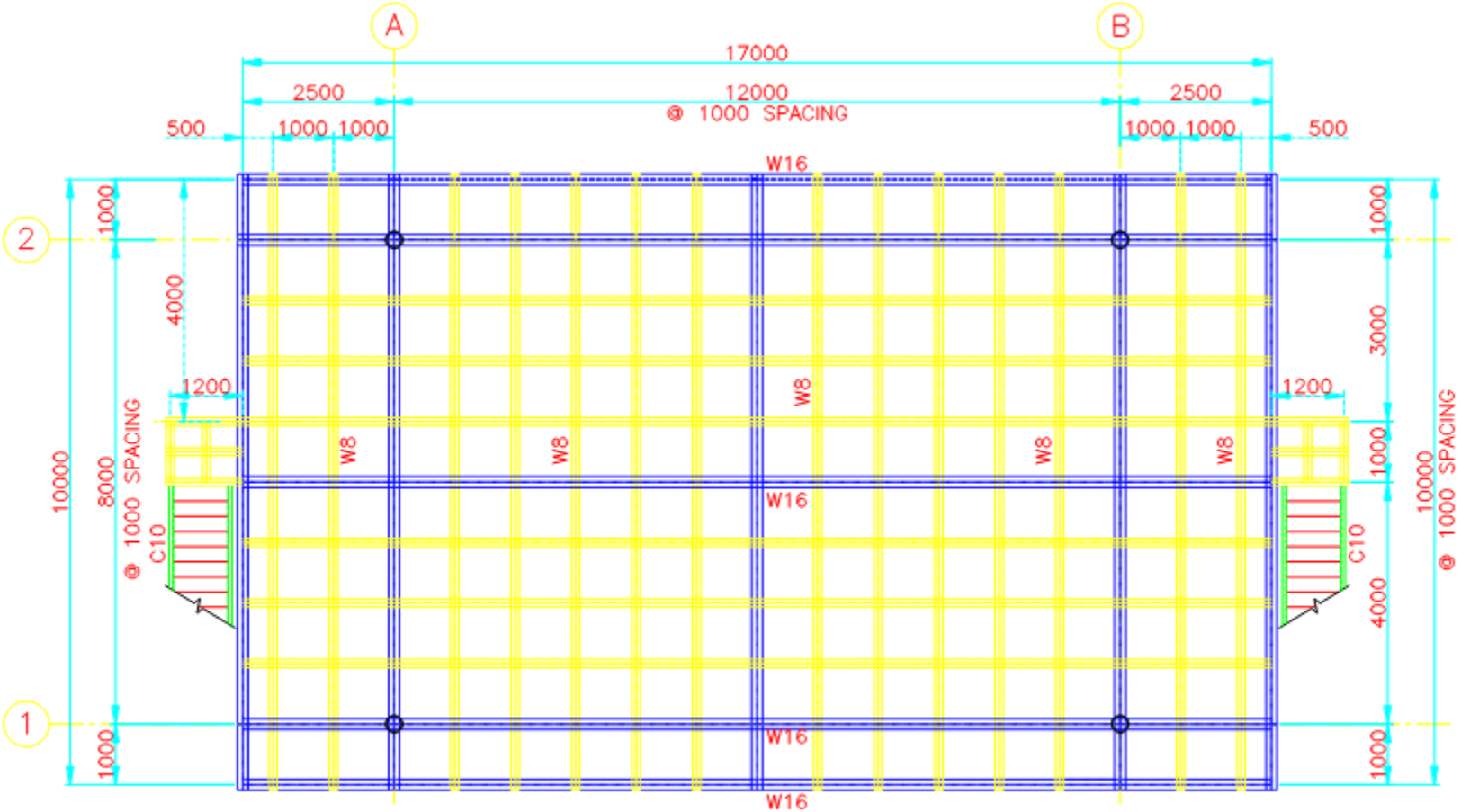

MAIN DECK LAYOUT PLAN EL.(+) XXXXXXX TOS

ABT
Abiteye NAG Development Project

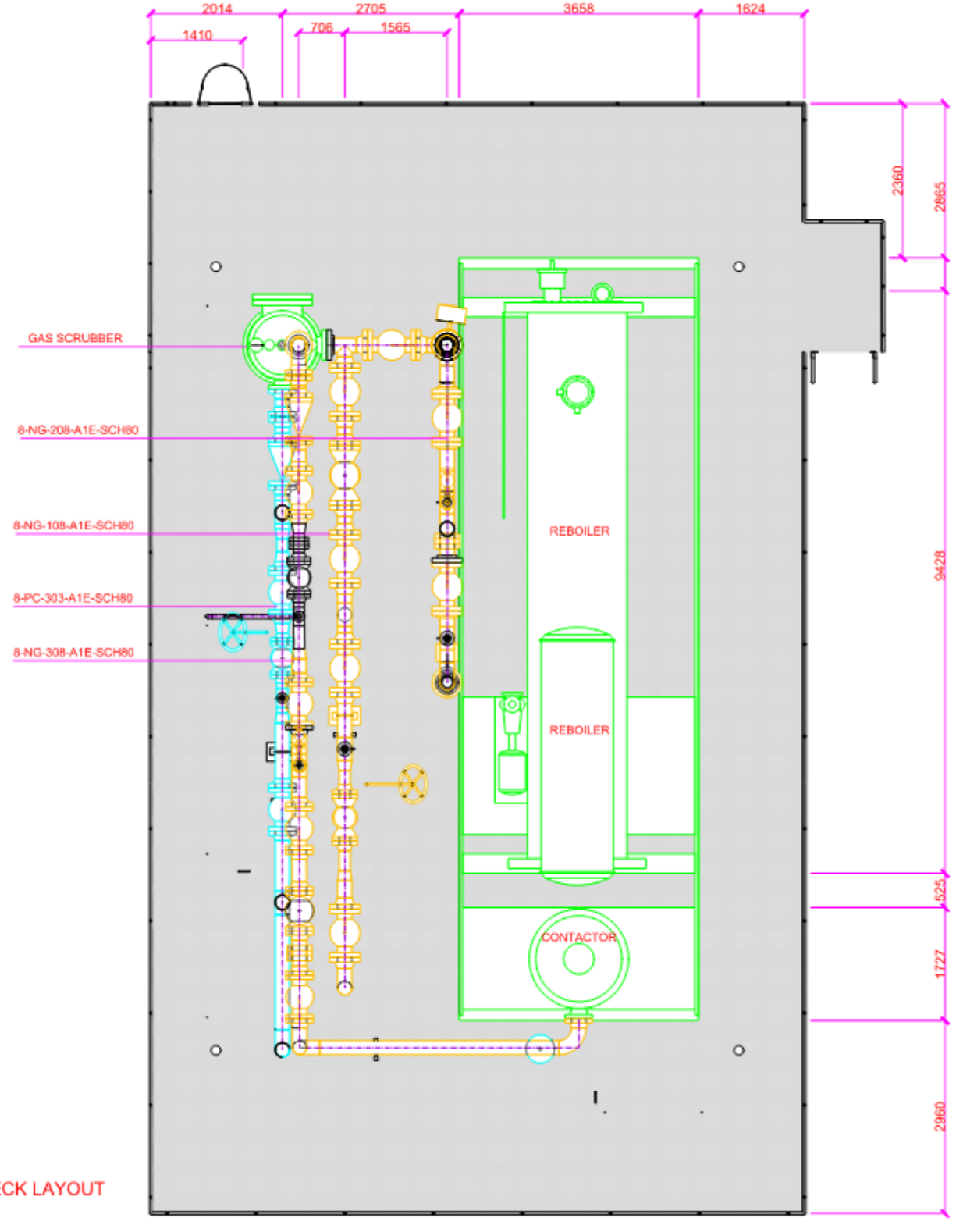

AIN DECK LAYOUT

RTH

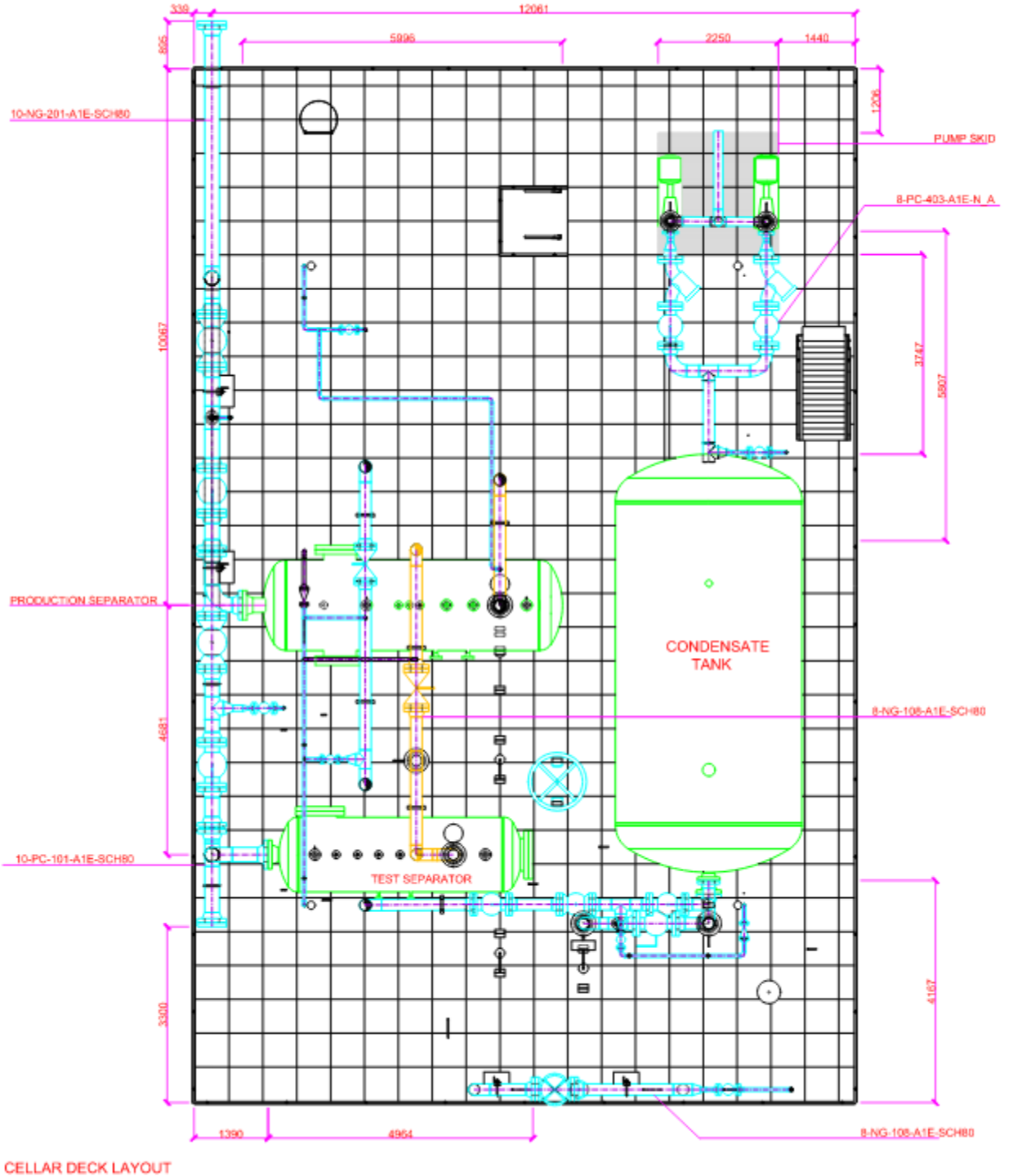

CELLAR DECK LAYOUT

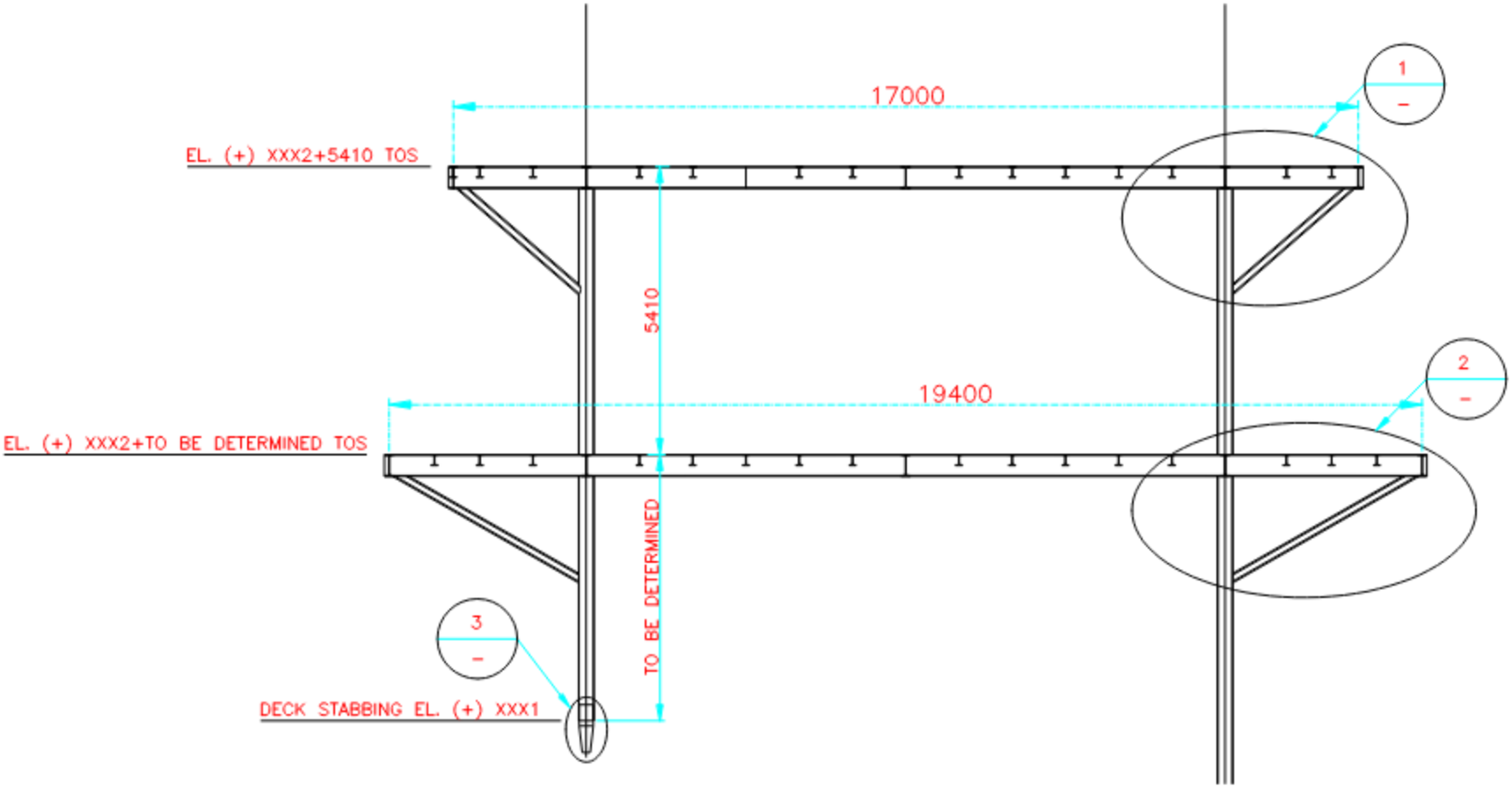

TRUSS ELEVATION AT GRID LINE 1 & 2

ABT
Abiteye NAG Devel
Project
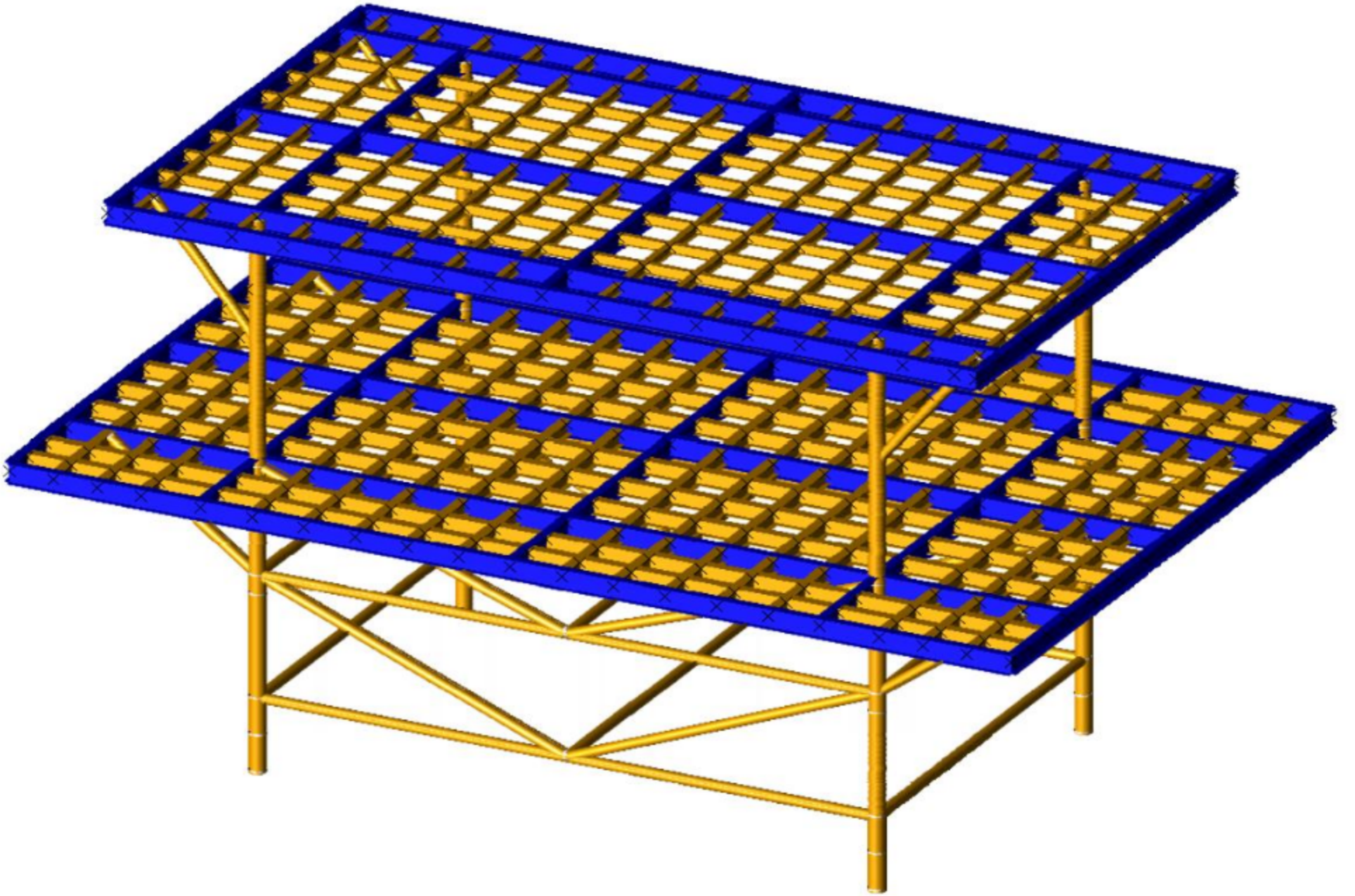
001	IDC	17-JUL-17	Issu